CODE	DESCRIPTION	POS.	GR.
281205B72	INFERIOR BASIS	1	
279309A72	FRONT WHEEL DIAMETER.35	2	
256764A	SHAFT FOR FRONT WHEEL	3	
276051A	TERMINAL BOX	4	
K210001800A	SOURCE CABLE 3X1	5	
L020011000A	ENSEMBLE COILS	6	
K100027600A	PRESSING PIPE	7	
K100027700A	OUTLET EVAPORATOR PIPE	8	
K100019100A	SILENCER PIPE+FILTER+CAPILLARY	9	
K070004298A	CONDENSE CONTAINER	10	
281148A69	BUOY	11	
281249A72	BUOY MOUNT	12	
L200000800A	SECCOPUR THERMO S ELECTRONIC PARTS	13	
K200000300A	EVAPORATOR TEMP.PROBE	14	
K200000500A	TEMP.\HUM SENSOR BOARD	15	
281242B132	BONNET	16	
281243A132	BACK	17	
K070004979A	SECCOPUR THERMO AIR INDUCTION GRILL	18	
K070004596A	AIR INDUCTION FILTER	19	
K070004696A	BASKET FOR ACTIVED CARBONS FILTER	20	
K070004700A	ACTIVED CARBONS FILTER	21	
281251B72	SECCOPUR THERMO CENTRAL SUPPORT	22	
281246B72	CONDENSE TANK	23	
281814A72	SECCOPUR THERMO SCROLL	24	
272137B	TOP INSULATOR	25	
276139A	4 POLE MOTOR 2 GEARS	26	
K060000796A	CENTRIFUGAL SUCTION FAN D.160X50	27	
L300001400A	COMPRESSOR GROUPWARE	28	
276009A	MICROSWITCH	35	
281247A72	MICRO-SWITCH SUPPORT	36	
K210000700A	SECCOPUR THERMO HEATING RESISTANCE	37	
K160005700A	GENERAL WIRING SECCOPUR THERMO S	38	
K170025400A	SECCOPUR S MARK STICKER	39	
K170005500A	OLIMPIA BRAND BLACK STICKER	40	
J140004600A	CLIP FOR HOLE D.6.6	41	
G0412A	SECCOPUR THERMO CONTROL BOARD ASSY	43	
G0413A	SECCOPUR THERMO POWER BOARD ASSY	44	
G0367A	GR.DEW CONTINUE DRAINING	45	
281502A	VIBRATION DUMPING FOR COMPRESSOR	46	
K210008800B	COMPRESSOR RUNNING CAPACITOR 8MF/45	47	
K100027500A	PRESSING PIPE	48	
G0477A	GR.BSA586CV COMPR.ACCESSORIES	49	
L020010900A	COMPRESSOR WIRING FOR SECCOPUR HITA	50	
K160002100A	TANK MICROSWITCH CABLE	51	
L010002500A	WATER CONTAINER GR.	52	

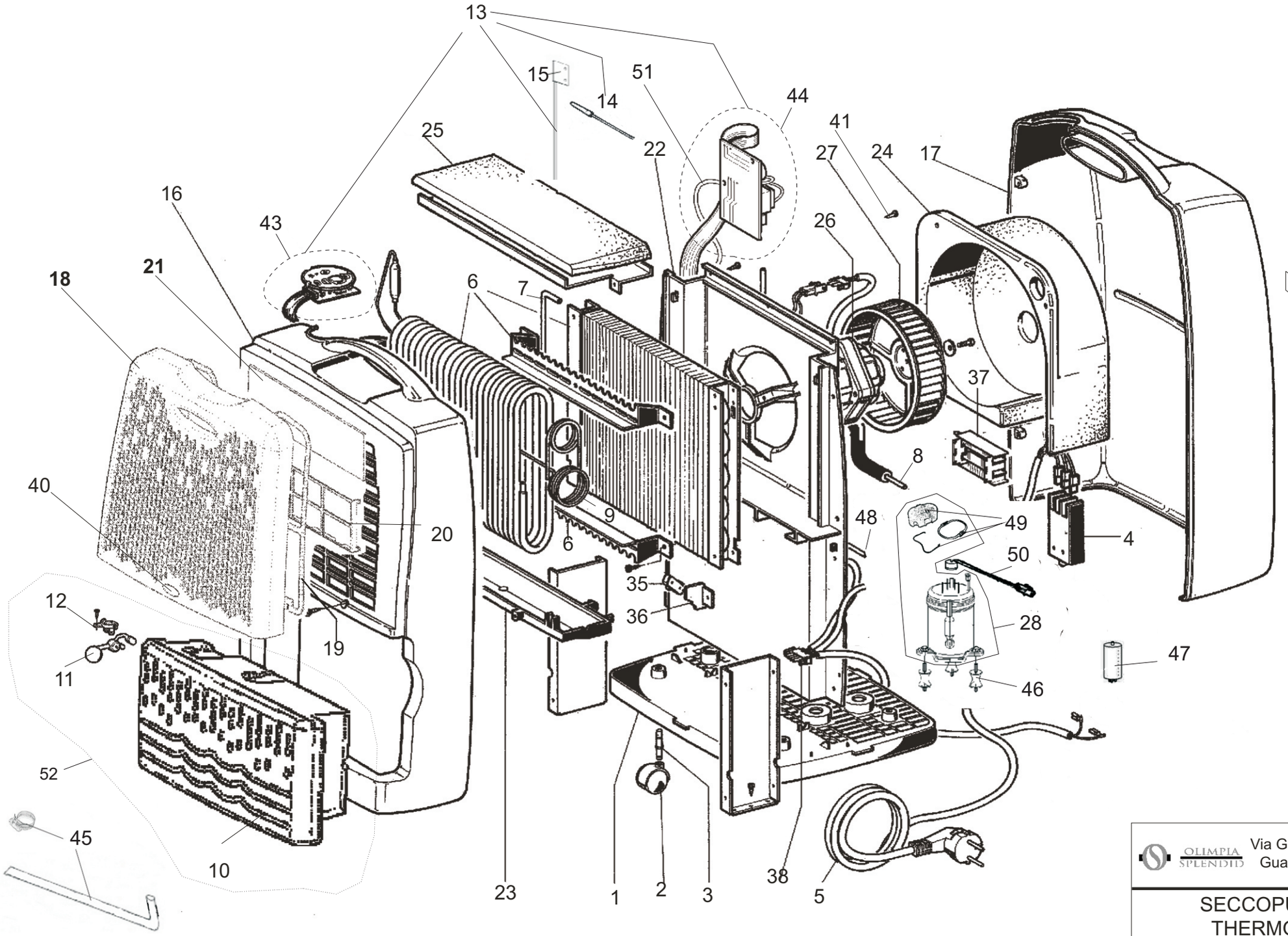

OLIMPIA SPLENDID
Via G. Rossa 1-3
Gualtieri (R.E.)

SECCOPUR
THERMO S

Agg. Aprile 2009 - RIF : 085.02